Presence detector - Professional Line

# IR Quattro 8m

COM1 - in-ceiling installation
EAN 4007841 079345
Article number 079345

# IR Quattro 8m

COM1 - in-ceiling installation
EAN 4007841 079345
Article number 079345

## Master circuit diagram

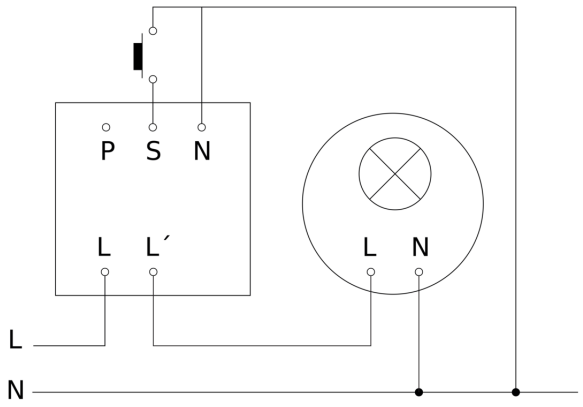


## Master/master interconnection circuit diagram

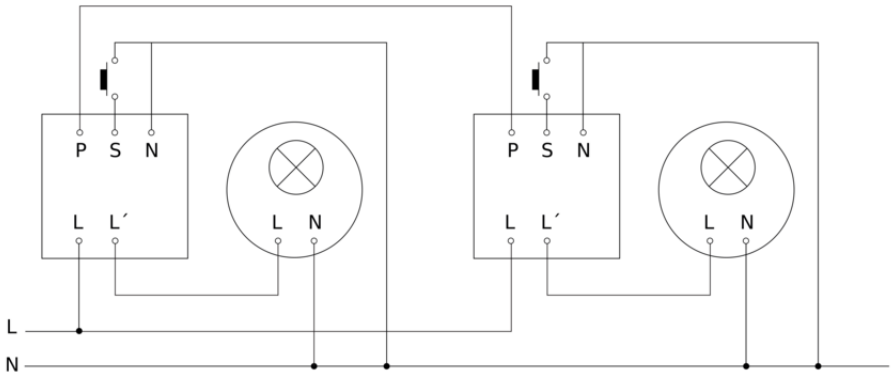

# IR Quattro 8m

COM1 - in-ceiling installation
EAN 4007841 079345
Article number 079345
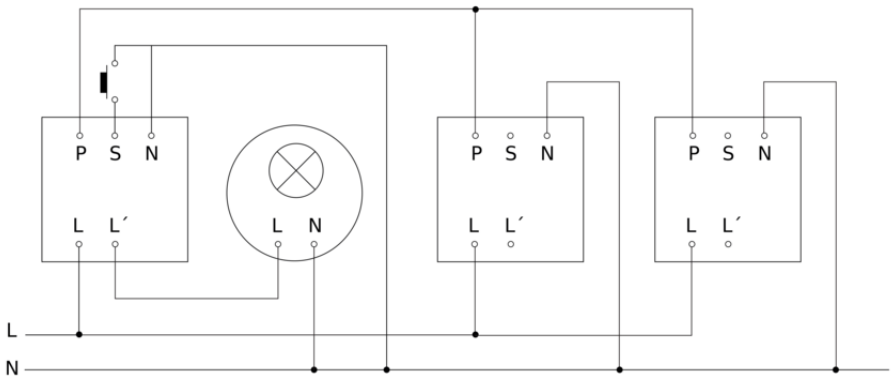
**Master/slave interconnection circuit diagram**